LUCECO

Installation & Operating Instructions

DECORATIVE LED GARDEN SPIKE LIGHT

IP66 RATED

30,000 HOURS

2 year standard WARRANTY

1

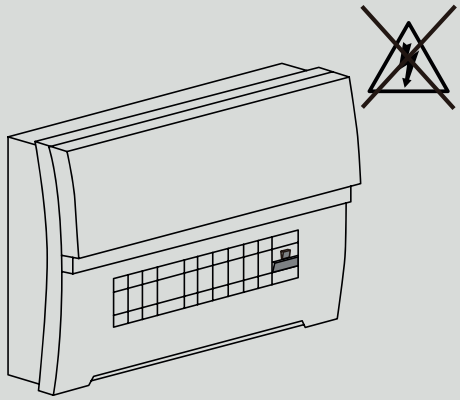

2

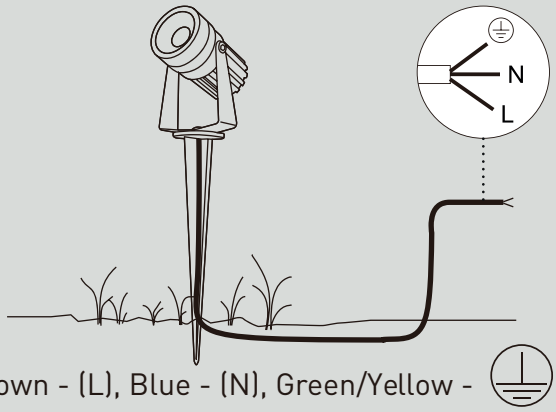

3

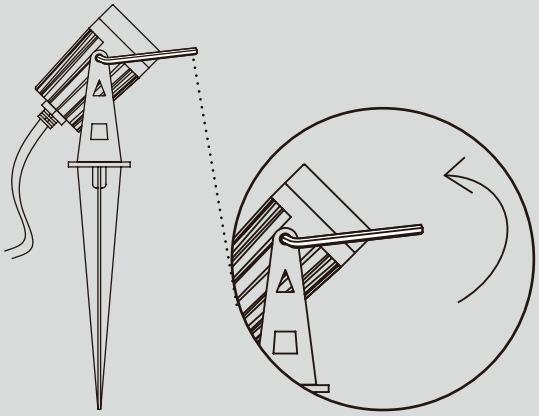

4

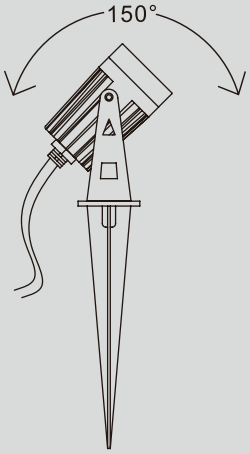

5

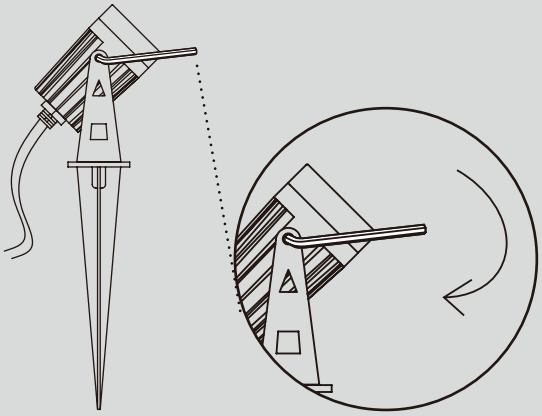

6

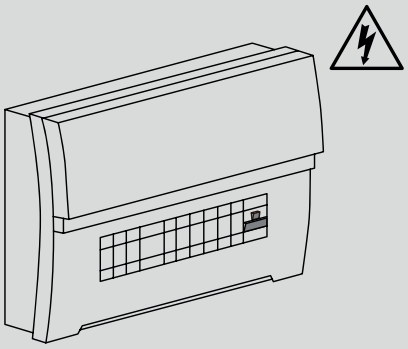

Tech Help Line
UK - **0330 0249 279**
Non UK - **+44 (0)1952 238 100**
Supplied by LUCECO
Stafford Park 1, Telford, Shropshire, England, TF3 3BD
Visit our website at **www.luceco.com**

Kontakt
UK - **0330 0249 279**
Non UK - **+49 40 89066 878 - 29**
Geliefert von Luceco GmbH
Holstenplatz 20b,
22765 Hamburg DEUTSCHLAND
Besuchen Sie uns auf **www.luceco.de**

Support Technique
UK - **0330 0249 279**
Non UK - **+33 (0)1 61 10 10 35**
Notice fournie par
Luceco SAS France & Belux 3
Rue de Courtalin, Magny Le Hongre 77700
FRANCE & BELUX
Visitez note site Web **www.luceco.fr**

Servicio de asistencia telefónica
UK - **0330 0249 279**
Non UK - **+34 93 576 83 21**
Facilitado por BG Electrical Ltd
Liessamins, 6, 08338,
Premia de Dalt Barcelona, Spain
Visite nuestra web en **www.luceco.com**

Assistenza tecnica telefonica
UK - **0330 0249 279**
Non UK - **+39 0434 1696795**
Fornito da BG Electrical Ltd Nexus
Italia, Via Amman 10 33170
Pordenone, Italy
Visitate il nostro sito **www.luceco.com**